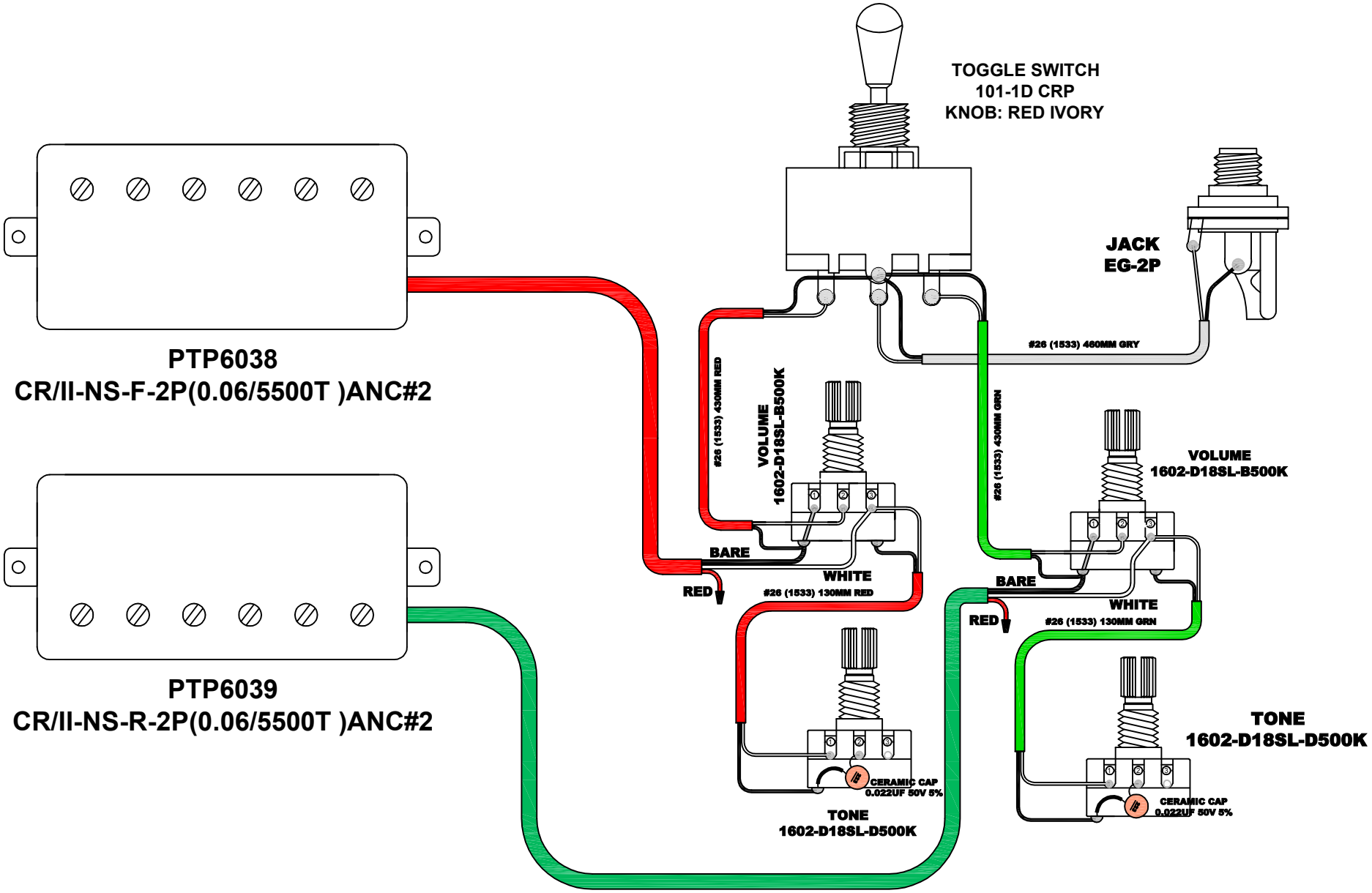

MODEL NAME	CORT-CR200,CR250 ,CZ20			○ Cort CO.
DRAWING NO				○
APPROVED BY	CHECKED BY	DESIGN BY	DRAWING BY	